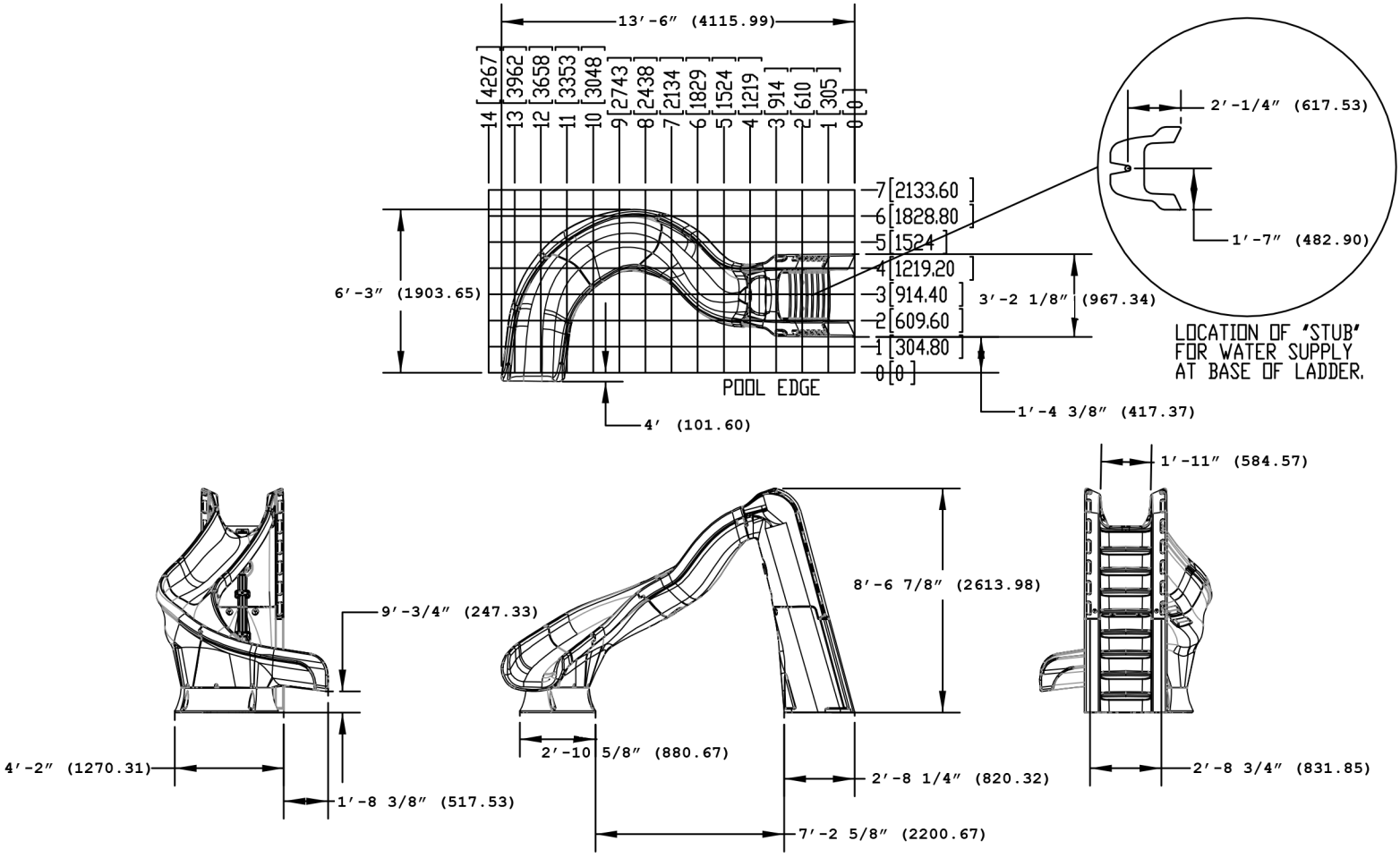

UNLESS OTHERWISE SPECIFIED DIMENSIONS ARE IN INCHES, TOLERANCES ARE:

FRACTIONAL:	±1/16
ANGULAR:	±1°
TWO PLACE DECIMAL:	±.06
THREE PLACE DECIMAL:	±.031

DESCRIPTION: TURBOTWISTER SLIDE LEFT CURVE

MATERIAL: ASSEMBLY

PART NO.: 688-209-582X REV. A

DRAWN BY: X DATE: 9.22.14

CHECKED BY: DATE:

S.R. Smith™
P.O. BOX 400 - 1017 S.W. BERG PARKWAY
CANBY, OREGON 97013
PHONE (503) 266-2231

SIZE: A SCALE: 1:64 SHEET 1 OF 1

COPYRIGHT 2014 S.R. SMITH, LLC.